Electronically Controlled Transmission

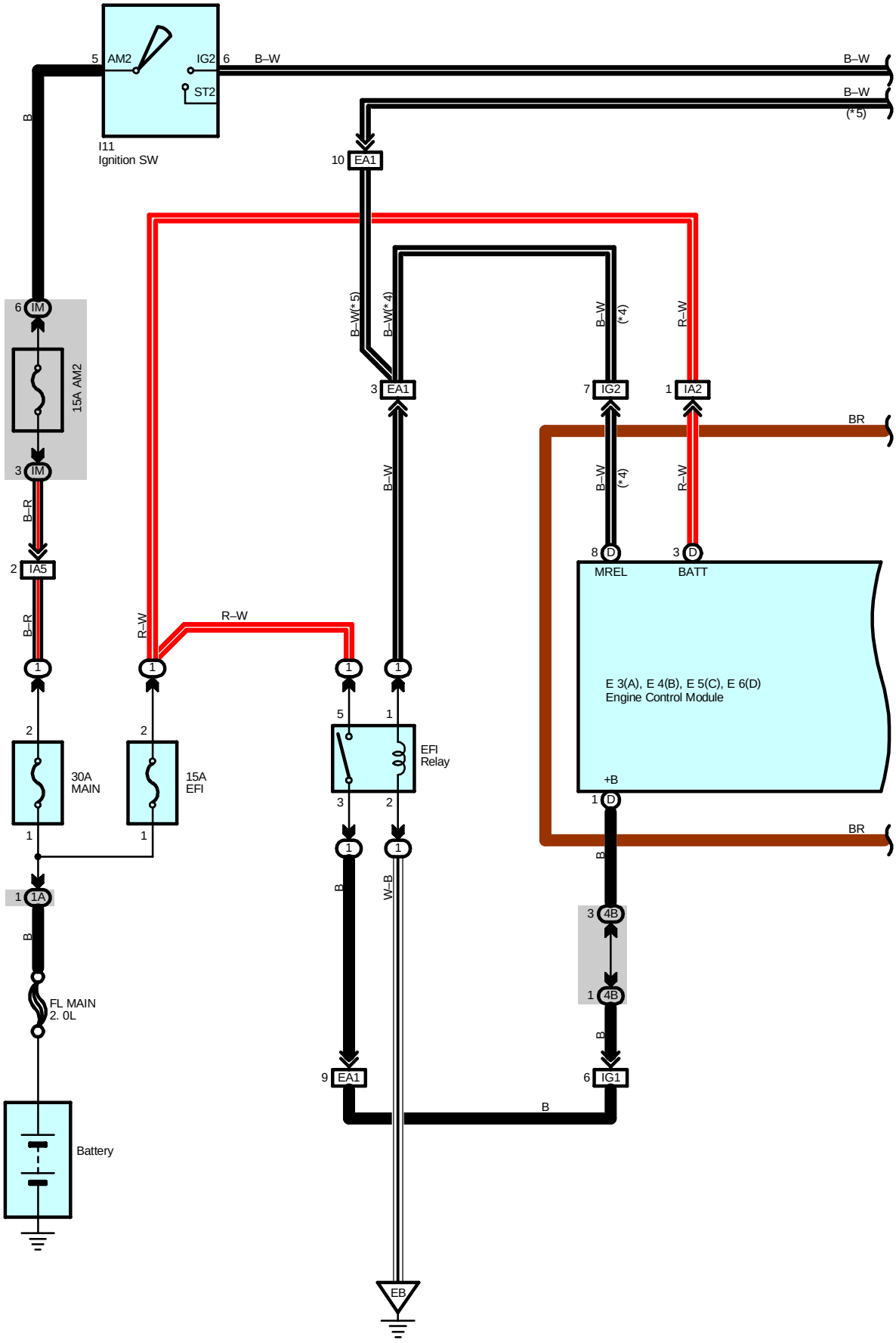

cardiagn.com

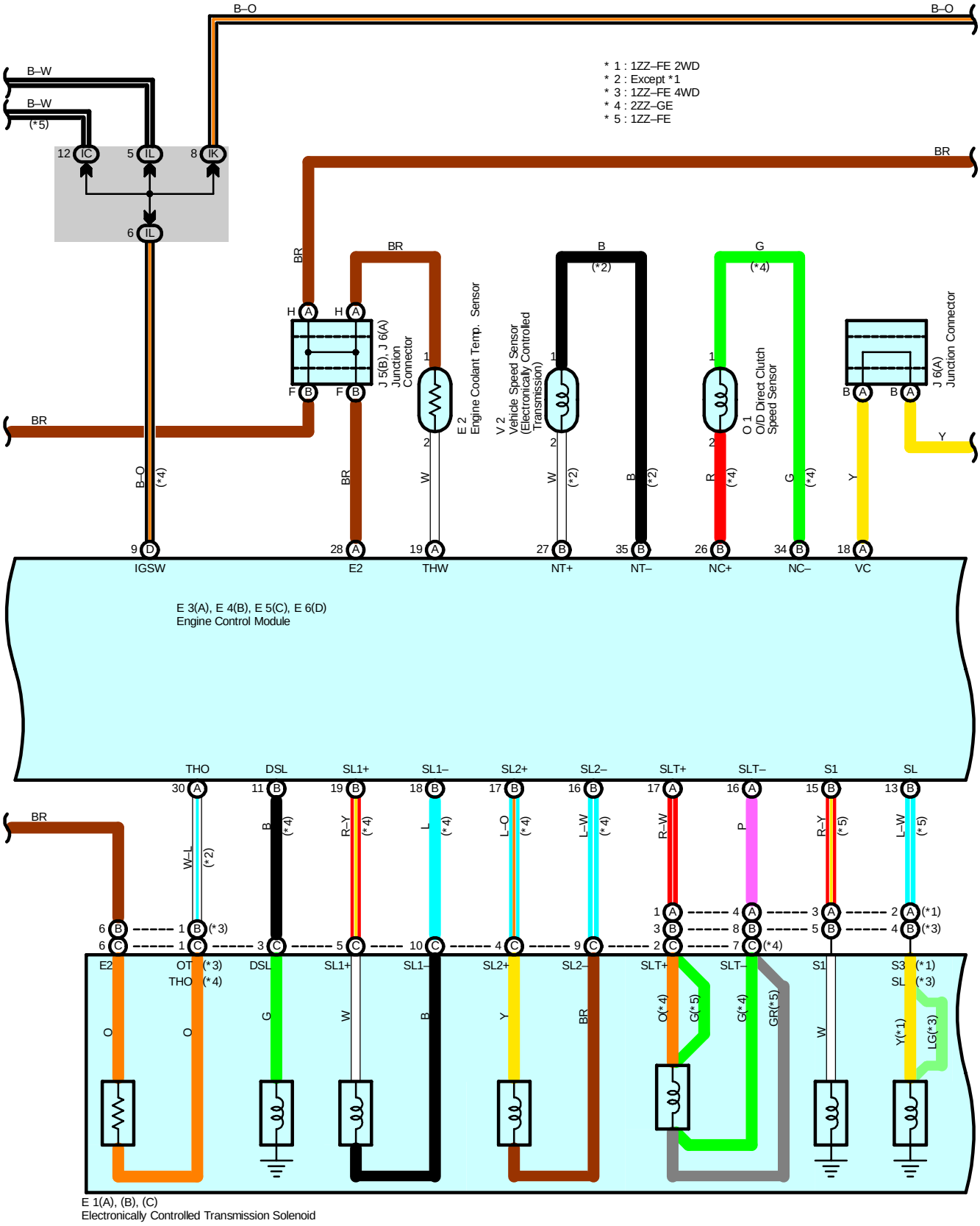

cardiagn.com

Electronically Controlled Transmission

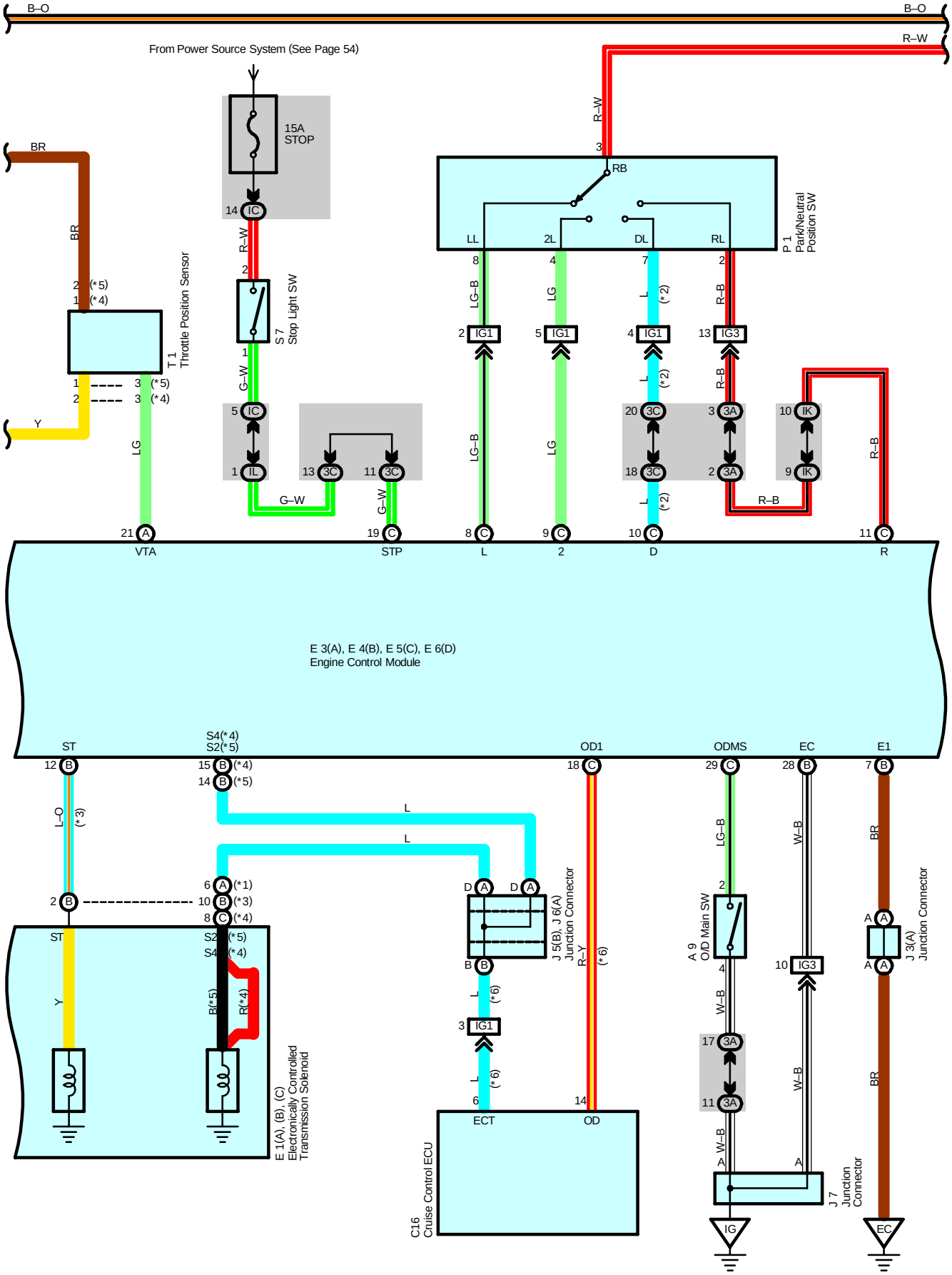

cardiagn.com

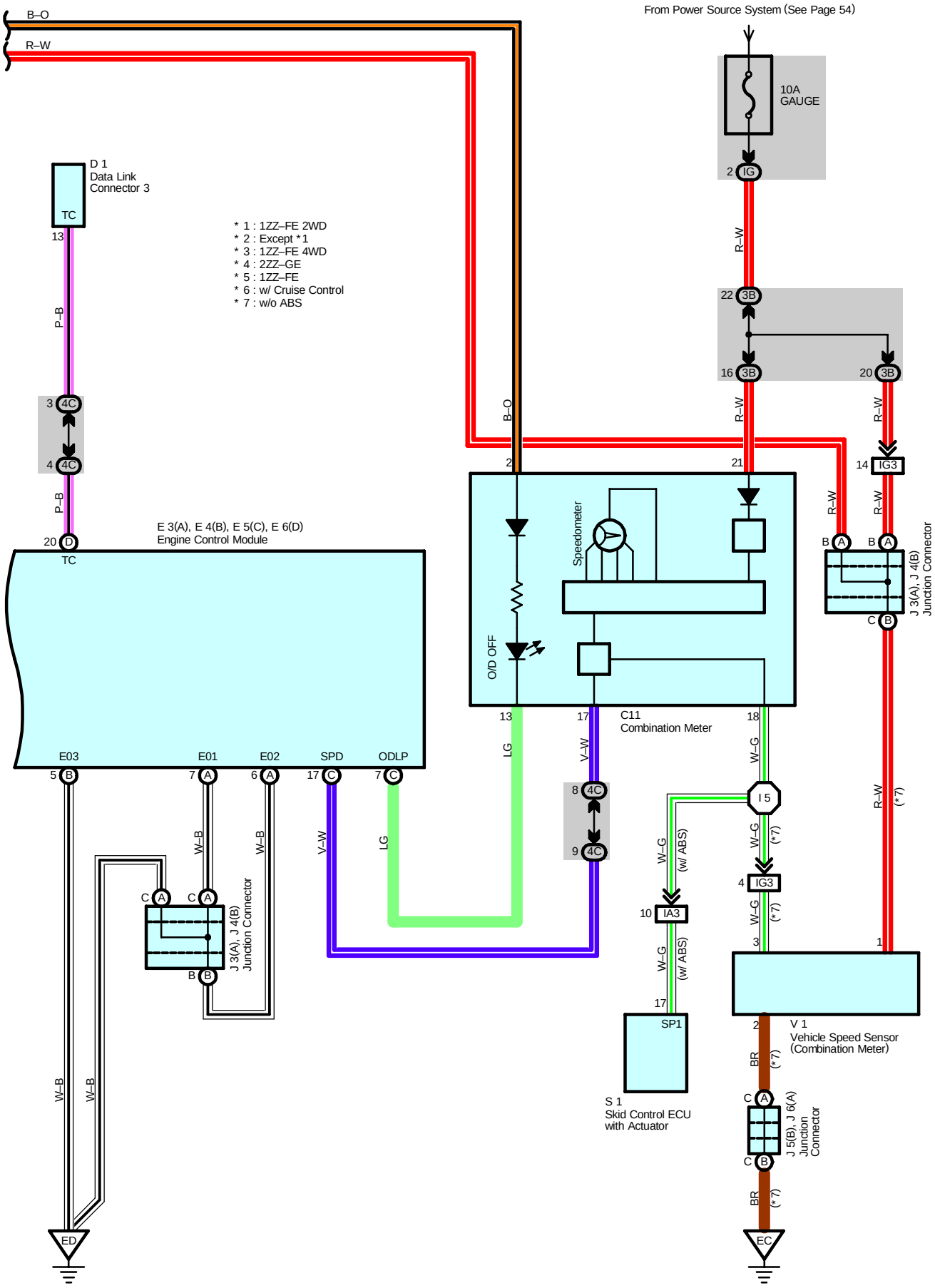

cardiagn.com

System Outline

Previous automatic transaxle have selected each gear shift using mechanically controlled throttle hydraulic pressure, governor hydraulic pressure and lock–up hydraulic pressure. The electronically controlled transmission, however, controls the line pressure and lock–up pressure etc. electrically, through the solenoid valve. The engine control module controls each solenoid valve based on the input signals from each sensor, which makes smooth driving possible by shift selection for each gear that is most appropriate to the driving conditions at that time.

1. Gear Shift Operation

When driving, the engine warm up condition is input as a signal to TERMINAL THW of the engine control module from the engine coolant temp. sensor and the vehicle speed signal from vehicle speed sensor is input to TERMINAL NT+ of the engine control module. At the same time, the throttle valve opening signal from the throttle position sensor is input to TERMINAL VTA of the engine control module as throttle angle signal.
Based on these signals, the engine control module selects the best shift position for the driving conditions and sends current to the electronically controlled transmission solenoid.

2. Stop Light SW Circuit

If the brake pedal is depressed (Stop light SW on) when driving in lock–up condition, a signal is input to TERMINAL STP of the engine control module, the engine control module operates and continuity to the lock–up solenoid is cut.

3. Overdrive Circuit

∗ Overdrive on
When the engine is turned on from ignition off, the engine control module turns the O/D on. When the O/D main SW is pushed while the O/D is off, a signal is input into TERMINAL ODMS of the engine control module, and the O/D is turned on by the engine control module. In this case, the engine control module controls the gear shift according to the vehicle's driving condition, using the O/D range. At this time, the O/D OFF indicator light is off.

∗ Overdrive off
When the O/D main SW is pushed while the O/D is on, a signal is input into TERMINAL ODMS of the engine control module, and the O/D is turned off. At this time, the current flows through the O/D OFF indicator light to TERMINAL ODLP of the engine control module. As a result, the O/D OFF indicator light turns on, and the engine control module controls the gear shift according to the vehicle's driving condition, without using the O/D range.

Service Hints

E3 (A), E5 (C), E6 (D) Engine Control Module

L–E1 : 7.5–14.0 volts with the ignition SW on and the shift lever at L position
2–E1 : 7.5–14.0 volts with the ignition SW on and the shift lever at 2 position
R–E1 : 7.5–14.0 volts with the ignition SW on and the shift lever at R position
STP–E1 : 9.0–14.0 volts with the brake pedal depressed
THW–E2 : 0.2–1.0 volts with the engine coolant temp. 60˚C (140˚F) –120˚C (248˚F) and engine idling
VTA–E2 : 0.3–0.8 volts with the ignition SW on and the throttle valve fully closed
3.2–4.9 volts with the ignition SW on and the throttle valve fully open
VC–E2 : 4.5–5.5 volts with the ignition SW on
ODMS–E1 : 9.0–14.0 volts with the ignition SW on
0–3.0 volts with the ignition SW on and press continuously the O/D main SW
+B–E1 : 9.0–14.0 volts with the ignition SW on
ODLP–E1 : Approx. 12 volts with the ignition SW on and the O/D main SW turned off

P1 Park/Neutral Position SW

3–2 : Closed with the shift lever in R position
3–4 : Closed with the shift lever in 2 position
3–8 : Closed with the shift lever in L position

cardiagn.com

○ : Parts Location

Code		See Page	Code		See Page	Code	See Page
A9		38	E4	B	38	P1	35 (2ZZ–GE)
C11		38	E5	C	38		37 (1ZZ–FE)
C16		38	E6	D	38	S1	35 (2ZZ–GE)
D1		38	I11		39		37 (1ZZ–FE)
E1	A	36 (1ZZ–FE)	J3	A	39	S7	39
	B	36 (1ZZ–FE)	J4	B	39	T1	35 (2ZZ–GE)
	C	34 (2ZZ–GE)	J5	B	39		37 (1ZZ–FE)
E2		34 (2ZZ–GE)	J6	A	39	V1	37 (1ZZ–FE)
		36 (1ZZ–FE)	J7		39	V2	35 (2ZZ–GE)
E3	A	38	O1		35 (2ZZ–GE)		37 (1ZZ–FE)

⬭ : Relay Blocks

Code	See Page	Relay Blocks (Relay Block Location)
1	23	Engine Room R/B (Engine Compartment Left)

⬭ : Junction Block and Wire Harness Connector

Code	See Page	Junction Block and Wire Harness (Connector Location)
IC	25	Engine Room Main Wire and Instrument Panel J/B (Lower Finish Panel)
IG	25	Instrument Panel Wire and Instrument Panel J/B (Lower Finish Panel)
IK	24	
IL		
IM		
1A	23	Engine Wire and Engine Room J/B (Engine Compartment Left)
3A	29	Instrument Panel Wire and RH J/B (Right Side of the Instrument Panel Reinforcement)
3B		
3C		
4B	32	Instrument Panel Wire and Center J/B (Behind the Combination Meter)
4C		

▭ : Connector Joining Wire Harness and Wire Harness

Code	See Page	Joining Wire Harness and Wire Harness (Connector Location)
EA1	42 (2ZZ–GE)	Engine Wire and Engine Room Main Wire (Inside of the Engine Room R/B)
	44 (1ZZ–FE)	
IA2	46	Engine Room Main Wire and Instrument Panel Wire (Instrument Panel Reinforcement LH)
IA3		
IA5		
IG1	48	Engine Wire and Instrument Panel Wire (Blower Unit RH)
IG2		
IG3		

▽ : Ground Points

Code	See Page	Ground Points Location
EB	42 (2ZZ–GE)	Front Left Suspension Tower
	44 (1ZZ–FE)	
EC	42 (2ZZ–GE)	Left Side of the Cylinder Head
	44 (1ZZ–FE)	
ED	42 (2ZZ–GE)	
	44 (1ZZ–FE)	
IG	46	Right Kick Panel

cardiagn.com

: **Splice Points**

Code	See Page	Wire Harness with Splice Points	Code	See Page	Wire Harness with Splice Points
I5	48	Instrument Panel Wire			

cardiagn.com